지시외 용접치수	지시외 모서리부분	지시외 허용 공차	대략	구	0.5 ~ 6	6 ~ 30	30 ~ 120	120 ~ 315	315 ~ 1000	1000 ~ 2000
a	지시외일반 모서리제거 C = 0.3~1.2 R = 0.3~1.2	지시외 치수		미	±0.1	±0.2	±0.3	±0.5	±0.8	±1.2

표 면 거 칠 기									
Ra	√	25	12.5	6.3	3.2	1.6	0.8	0.2	0.1
Rmax		100S	50S	25S	12.5S	6.3S	3.2S	0.8S	0.4S
다듬질	~	▽		▽▽		▽▽▽		▽▽▽▽	

NO.	DATE	REVISION & DESCRIPTION	SIGNATURE REVIEWED	SIGNATURE CHECKED
1	-	---	-	-

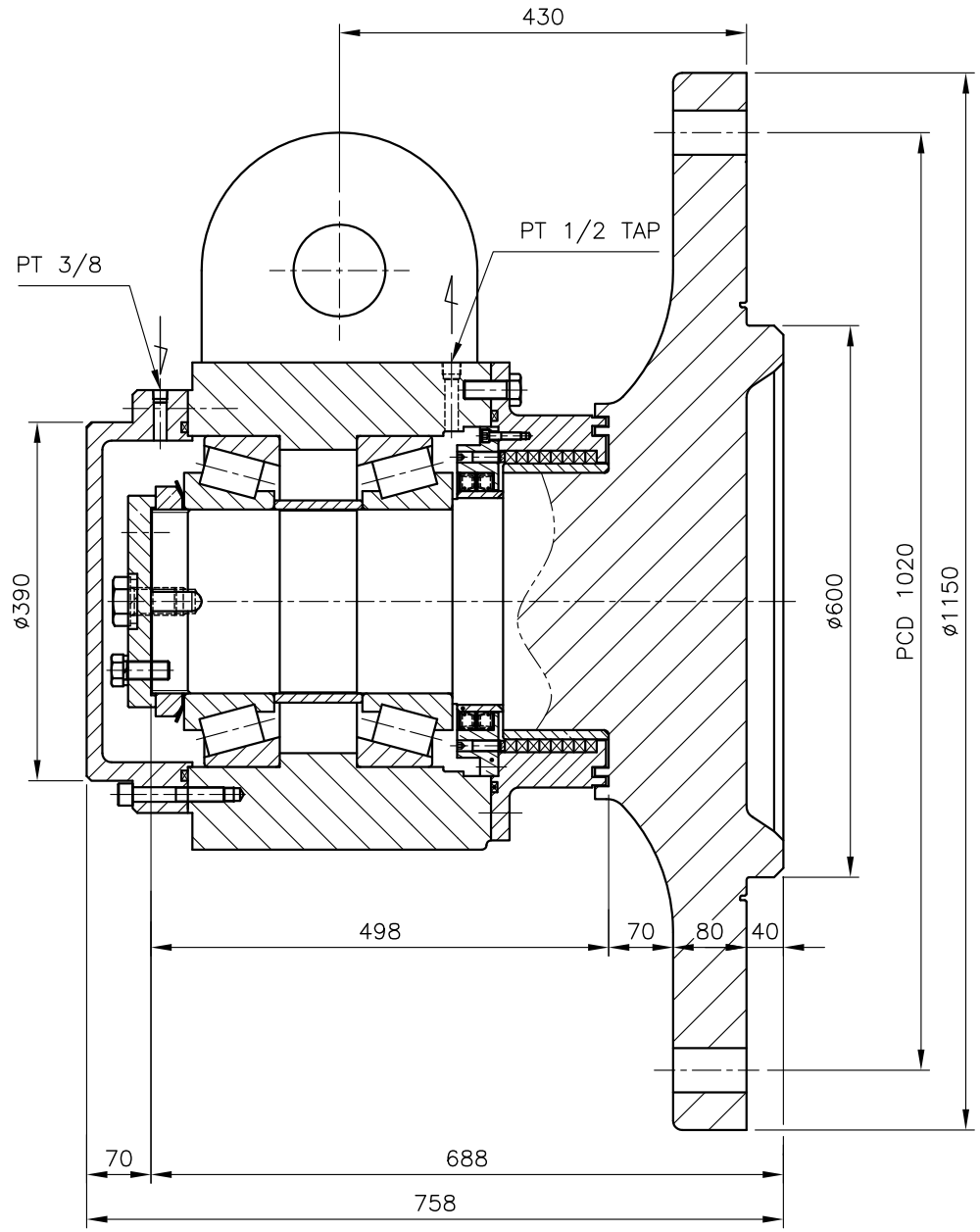

NO.	DESCRIPTION	MAT'	QUANTITY PERSET	QUANTITY TOTAL	WEIGHT(kg) PERONE	WEIGHT(kg) TOTAL	REMARK'S
23	HEX BOLT	S45C	4				M20x50L
22	SET SCREW	S45C	10				M12x45L
21	HEX BOLT, S/W	S45C	1				M30x50L
20	SPACER	SS400	1				t5
19	SOCKET HEX BOLT	S45C	12				M16x100L
18	HEX BOLT	S45C	12				M20x50L
17	SOCKET HEX BOLT	S45C	6				M8x35L
16	O-RING	N.B.R	1				P375
15	O-RING	N.B.R	1				P400
14	OIL SEAL	N.B.R	2				SB ø240xø280x19B
13	GRAND PACKING (990L)	TEFLON	8				1/2"
12	TAPER ROLLER BRG'	PURCH'	2				#32240
11	SPACER	STKM13A	1				
10	HOUSING COVER	SS400	1			47	
09	END PLATE	SS400	1			7.7	
08	LOCK WASHER	PURCH'	1				AW40
07	LOCK NUT	PURCH'	1				AN40
06	SLEEVE	STKM13A	1				
05	SLEEVE	STKM13A	1				
04	OILSEAL HOUSING	SS400	1			14.5	
03	PACKING HOUSING	SS400	1			54	
02	HOUSING (330x520x770)	GC20	1			470	
01	SPINDLE (ø1150x688L)	SC49	1			956	
	SUBMERSIBLE BEARING		1set			1655	

▽▽▽▽ 0.8S , ▽▽▽ 6.3S , ▽▽ 25S , ▽ 100S

BO GWANG MACHINERY CO., LTD

TITLE											
	一고로 PLANT	SUBMERSIBLE BEARING ASS'Y									
	수재 FACILITY										
POSCO		DRAWN	CHECKED	REVIEWED	APPROVED	Bo Gwang	DRAWN	CHECKED	REVIEWED	APPROVED	
	SIGNATURE						C.J.S				
	DATE						2004-06-09				

SCALE	1:1(A3)	DIM.	mm	PRO-JECTION
PFD.UNIT.NO.	MANUF NO.			
	STOCK NO.			
	BG-S/B-01-000/01~06			
MODLE NO.	BGMC-SB1150			